UNIT-1

Digital Logic families

This unit deals with basics of digital gate properties, introduction to IC's, digital logic families.

Digital gate Properties:

- Logic noise margin
- Propagation delay
- Fan-In/ Fan-Out
- Current sinking/sourcing
- Power dissipation
- Figure of Merit

a) logic voltage levels logic voltage levels and DC noise margin :

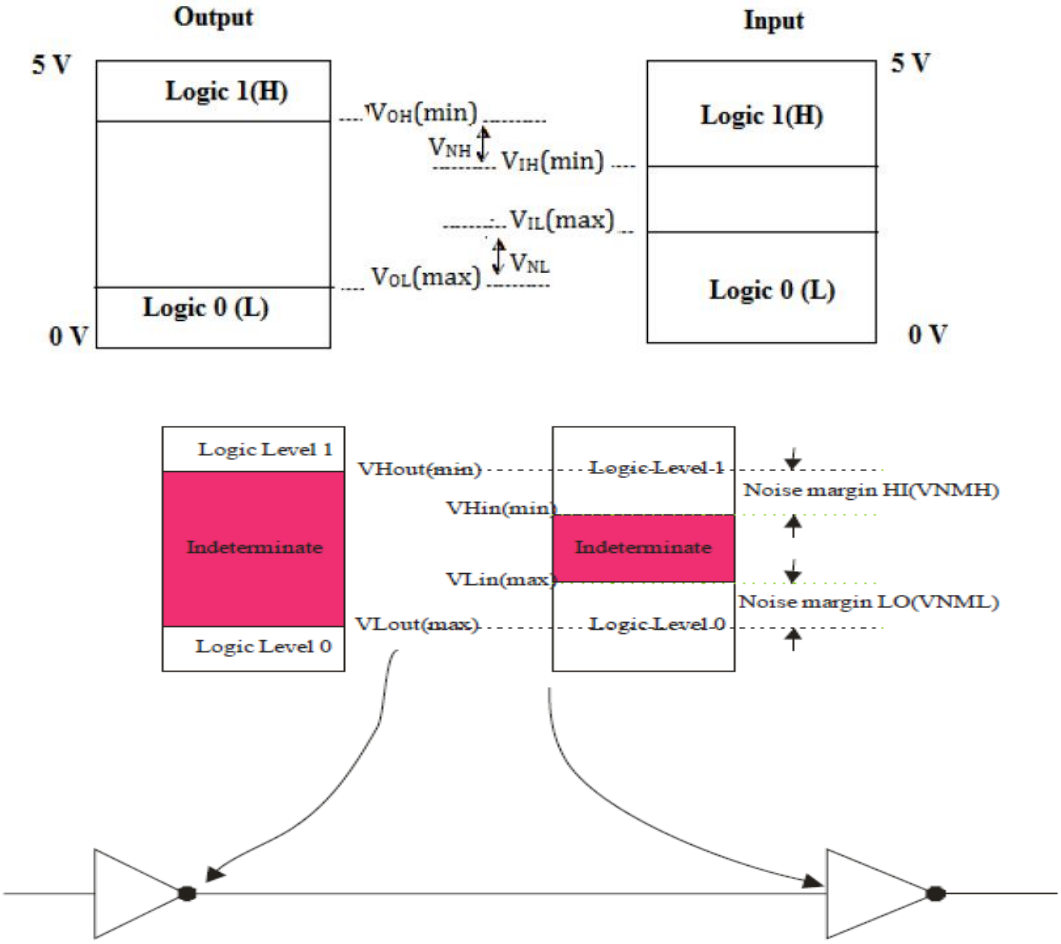

High Level Input Voltage (VIH(min)): It is the minimum voltage required for a logic '1' at an input. Any voltage below this level will not be accepted as HIGH by logic Circuit.

High Level Output Voltage (VOH(min)): It is the minimum voltage required for a logic '1' at an Output under defined load conditions.

Low Level Input Voltage (VIL(max)): It is the maximum voltage required for a logic '0' at an input. Any voltage above this level will not be accepted as LOW by logic Circuit.

Low Level Output Voltage (VOL(max)): It is the maximum voltage required for a logic '0' at an Output under defined load conditions.

Noise Margin:

In practice sometimes unwanted signals called noise may occur by dropping input voltage less than VIH(min) and rise above the VIL(max).

To avoid this we kept VOH(min), VOL(max) to certain fraction of voltages below and above respectively. These limits are called DC Noise margins.

DC noise margin allows digital circuit to function properly.

The noise margin in HIGH state is VNH= VOH(min) – VIH(min)

The noise margin in LOW state is VNL= VIL(max) – VOL(max)

Determine the HIGH-level and LOW-level noise margins for CMOS and for TTL by using the information in Figures 14–2 and 14–3.

Solution For 5 V CMOS,

$$V_{IH(min)} = 3.5\text{ V}$$
$$V_{IL(max)} = 1.5\text{ V}$$
$$V_{OH(min)} = 4.4\text{ V}$$
$$V_{OL(max)} = 0.33\text{ V}$$
$$V_{NH} = V_{OH(min)} - V_{IH(min)} = 4.4\text{ V} - 3.5\text{ V} = \mathbf{0.9\text{ V}}$$
$$V_{NL} = V_{IL(max)} - V_{OL(max)} = 1.5\text{ V} - 0.33\text{ V} = \mathbf{1.17\text{ V}}$$

For TTL,

$$V_{IH(min)} = 2\text{ V}$$
$$V_{IL(max)} = 0.8\text{ V}$$
$$V_{OH(min)} = 2.4\text{ V}$$
$$V_{OL(max)} = 0.4\text{ V}$$
$$V_{NH} = V_{OH(min)} - V_{IH(min)} = 2.4\text{ V} - 2\text{ V} = \mathbf{0.4\text{ V}}$$
$$V_{NL} = V_{IL(max)} - V_{OL(max)} = 0.8\text{ V} - 0.4\text{ V} = \mathbf{0.4\text{ V}}$$

A TTL gate is immune to up to 0.4 V of noise for both the HIGH and LOW input states.

Similarly current parameters can also specified as:

High Level Input Current (IIH): It is the current that flows into input when a specified high level voltage is applied to input.

High Level Output Current (IOH): It is the current that flows from an Output under specified load conditions.

Low Level Input Current (IIL): It is the current that flows into input when a specified low evel voltage is applied to input.

Low Level Output Current (IOL): It is the current that flows from an Output under specified load conditions.

b) Fan-Out/Fan -In:

- The fan-out in logic gate is number of inputs that the gate can drive without exceeding its worst case loading specifications.
- Fan-Out depends not only on the output characteristics but also on inputs that it is driving
- The LOW state and HIGH state fan-outs of a gate may not be equal.
- The Fan-In is the number of allowable inputs to the gate.

The fan-out of the gate is represented by:

$$\frac{I_{OH}}{I_{IH}} \text{ or } \frac{I_{OL}}{I_{IL}}$$

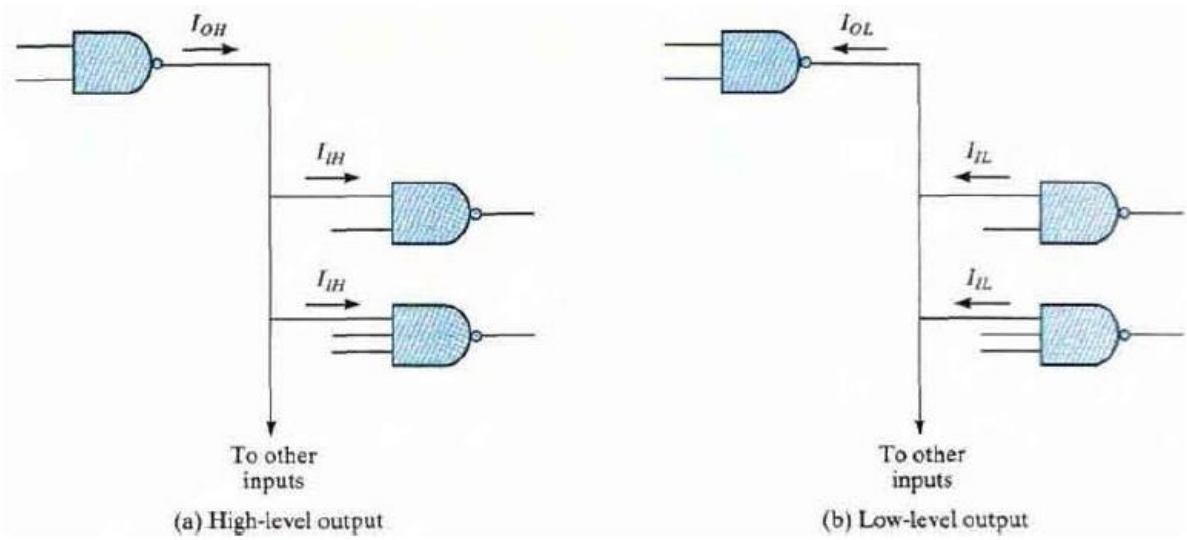

For example, the standard TTL gates have the following values for the currents I_{OH}= 400 p.A , I_{LH} = 40 p.A, I_{OL} = 16 mA, I_{IL} = I.6 mA then, the fanout of a gate is,

$$Fanout = \frac{I_{OH}}{I_{IH}} = \frac{I_{OL}}{I_{IL}} = \frac{400\mu A}{40pA} = \frac{16\mu A}{1.6pA} = 10$$

c) **Sinking Current(IOL(max)):** The maximum current that the output can sink in the low state while still maintaining an output voltage smaller than VOL(Max).
Sourcing Current(IOH(max)): The maximum current that the output can source/ supply in the high state while still maintaining an output voltage greater than VOH(Min).

Effects of loading: The basic loading effects on output are

- In the low state, the output voltage(V_{OL})may increase beyond $V_{OL(max)}$.
- In the high state, the output voltage(V_{OH})may fall beyond $V_{OH(min)}$.
- Propagation delay may increase beyond specifications.
- Output rise and fall times may increase beyond specifications.
- The Operating temperature may increase there by reducing reliability, It may also Cause device failure.

High state loading:

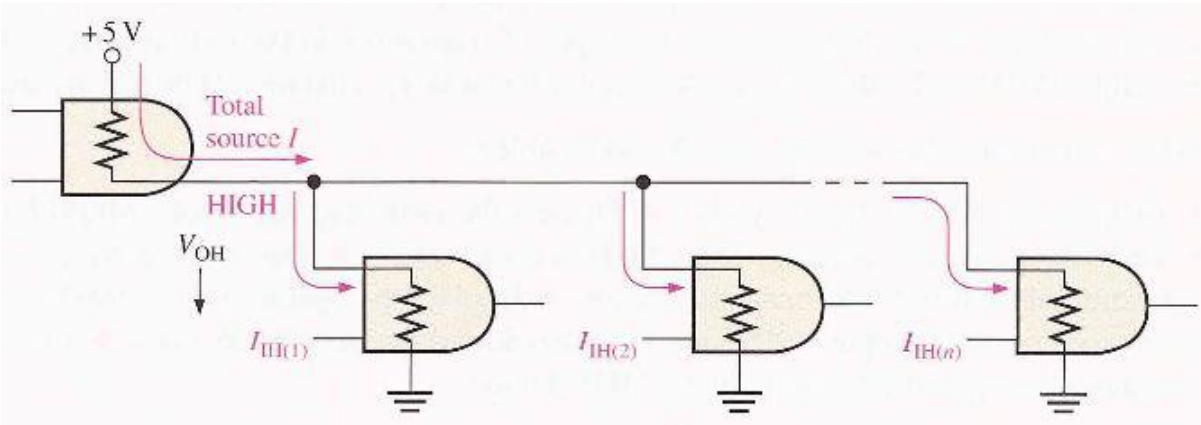

Low state loading:

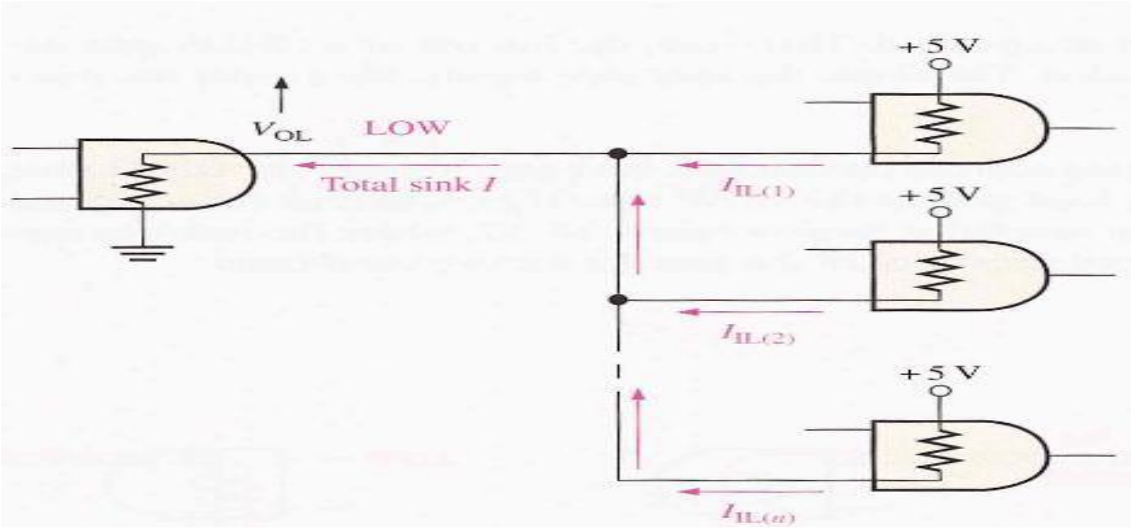

Problem Determine the fan-out for a 74LS00 NAND gate.

Solution According to the data sheet, the current parameters are as follows:

$$I_{IH(max)} = 40\ \mu A \qquad I_{OH(max)} = -400\ \mu A$$
$$I_{IL(max)} = -1.6\ mA \qquad I_{OL(max)} = 16\ mA$$

Fan-out for the HIGH output state is calculated as follows: Current $I_{OH(max)}$ is the maximum current that the gate can source to a load. Each load input requires an $I_{IH(max)}$ of 40 μA. The HIGH-state fan-out is

$$\left|\frac{I_{OH(max)}}{I_{IH(max)}}\right| = \frac{400\ \mu A}{40\ \mu A} = \mathbf{10}$$

For the LOW output state, fan-out is calculated as follows: $I_{OL(max)}$ is the maximum current that the gate can sink. Each load input produces an $I_{IL(max)}$ of -1.6 mA. The LOW-state fan-out is

$$\left|\frac{I_{OL(max)}}{I_{IL(max)}}\right| = \frac{16\ mA}{1.6\ mA} = \mathbf{10}$$

In this case both the HIGH-state fan-out and the LOW-state fan-out are the same.

Problem When a TTL NAND gate drives five TTL inputs, how much current does the driver output source, and how much does it sink?

Solution Total source current (in HIGH output state):

$$I_{IH(max)} = 40\ \mu A \text{ per input}$$

$$I_{T(source)} = (5 \text{ inputs})(40\ \mu A/\text{input}) = 5(40\ \mu A) = \mathbf{200\ \mu A}$$

Total sink current (in LOW output state):

$$I_{IL(max)} = -1.6\ mA \text{ per input}$$

$$I_{T(sink)} = (5 \text{ inputs})(-1.6\ mA/\text{input}) = 5(-1.6\ mA) = \mathbf{-8.0\ mA}$$

d.Propagation Delay:

- It is the amount of time that it takes for a change in input signal to produce a change in output signal.
- That is propagation delay of a gate is basically time interval between application of input and occurrence of output signal.
- Propagation delay is an important characteristics because it limits the speed at which it operates.
- Propagation delay is inversely proportional to speed. Propagation delay determines using 2 intervals as tPLH and tPHL.
- tPLH is delay time measured when output is changing from logic ‘0’ to logic ‘1’ state.
- tPHL is delay time measured when output is changing from logic ‘1’ state to logic ‘0’ state.
- The Propagation delay is given by tP= max(tPLH , tPHL), but some times it will be measured as average of tPLH and tPHL, as (tPLH + tPHL)/2

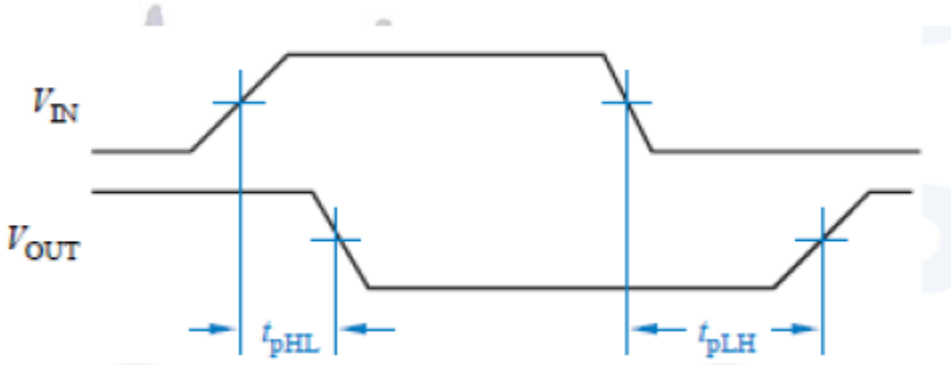

e. **Power dissipation:**

When a logic device is supplied with a signal, depending upon the duration the device is active, it consumes an amount of power that is to be supplied from the power supply. The total power dissipated by a logic device may be expected to comprise of static power (Ps) and dynamic power (Pd). Ps is due to the currents flowing through the device in maintaining the operating point for the device and the Pd is due to the switching activities (data input) in the circuit.

$$P_{Tot} = P_s + P_s$$

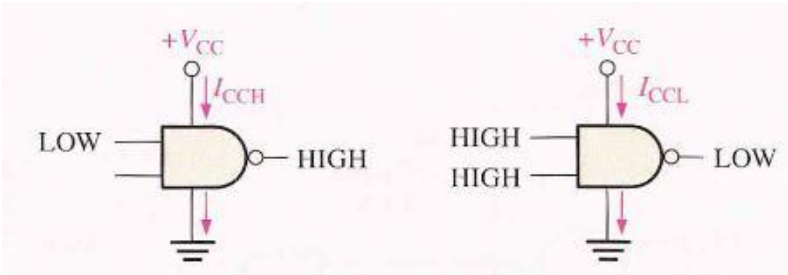

A logic gate draws current from the power supply (Source), and is different in HIGH and LOW output states as indicated in Figure above. The power (static) dissipation is then given by:

$$Ps = Vcc \times ICC$$

When a gate is pulsed, the output switches back and forth between HIGH and LOW. The supply current varies between ICCH and ICCL. The average power dissipation is obtained based on the duty cycle and is usually specified for 50%. The average supply current is given by:

$$ICC = (ICCH + ICCL)/2$$

$$\text{Then, } P_D = Vcc \times ICC$$

Power dissipation in TTL is constant over its range of operating frequencies. Power dissipation in CMOS is however, not constant and depends on operating frequency. As indicated in Figure below, it is very small at low frequencies and increases with frequency.

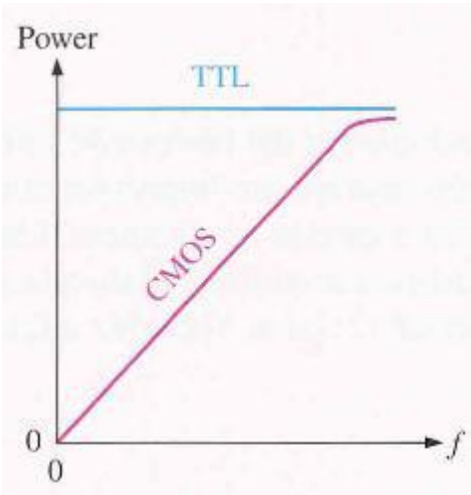

- When a CMOS output changes from Low to High, a transient charging current is supplied to load capacitance which may cause increase in frequency that leads to increase in power consumption by increased average current drawn from VDD.

- The power *dissipation* of a CMOS circuit whose output is not changing is called *static power dissipation* or *quiescent power dissipation.*

- A CMOS circuit dissipates significant power only during transitions is called *dynamic power dissipation.*

- Power consumption during transitions is given by $PT = C_{PD} \times VDD^2 \times f$

  where PT --- Internal power dissipation during transitions
  VDD--- Power supply voltage.
  C_{PD} --- Power dissipation capacitance

- Power consumption due to capacitive load is given by $PL = CL \times (VDD^2/2) \times 2 f$. (since 2 transitions/sec). Simplified equation is $PL = CL \times VDD^2 \times f$

f. Figure of merit

It is also known as power delay product. It is a product of power dissipation and propagation delay. The speed-power product is a figure-of-merit for selection of a logic circuit for any particular application. This is because, both power dissipation and propagation delay are the important parameters in measuring the performance of any system/circuit. Lower the value of this figure-of merit, better will be the system performance. For example, a LS-TTL device has a speed-power product of 22 pJ (Pico-joules-unit of measurement) against 1.2 pJ for a HCMOS device at 100 kHz.

Integrated circuit: A collection of one or more gates fabricated on a single silicon chip is called an *Integrated Circuit(IC)* or it can be defined as an Integrated Circuit(IC) is a silicon wafer or a Die that contains two or more number of active such as diodes, transistors and some of passive components such as resistors, capacitors.

History of IC:

- There are many ways are available to design electronic logic circuit. First electrically controlled logic circuits were developed in 1930s at Bell laboratories based on relays.

- The first electronic digital computer named as ENIAC was developed in mid 1940s based on vacuum tubes. It has 100 feet long, 10 feet height, 3 feet deep and consumed 140kw of power.

- By the invention of semiconductor diode and transistor after 1947 smaller, faster and more capable computers were designed.

- Better computers are designed by the invention of ICs which allowed multiples diodes, transistors and other components to be fabricated on a single chip of silicon in 1960s.

- The first IC family was introduced in 1960.

Classification of Digital ICs: Based on the size or number of logic components/gates fabricated per chip the ICs are classified into different Integrations as

Small Scale Integration (SSI): It have less than 100 components (about 10 gates).

Medium Scale Integration (MSI): It contains between 100-1000 components or have more than 10 but less than 100 gates.

Large Scale Integration (LSI): Here number of components is between 1000 and 10000 or have gates between 100-1000.

Very Large Scale Integration (VLSI): It contains components between 10000-100000 per chip or gates between 1000-10000 per chip.

Ultra Large Scale Integration (ULSI): It contains more than 100000 components per chip.

Giant Scale Integration (GSI): It contains much more than 2000000 components per chip.

Logic Families

It is a collection of different IC chips that have similar input, output and internal circuit characteristics i.e. group of compatible ICs with same logic levels and supply voltages but perform different logic functions.

NOTE: 1) Chips from same family can be interconnected.
2) Chips from different family may not be compatible, means they may use different power supply voltages and input, output conditions.

Classification of Logic Families:

Logic families are mainly classified as two types as
A) Bipolar Logic Families: It mainly uses bipolar devices like diodes, transistors in addition to passive elements like resistors and capacitors. These are sub classified as Saturated bipolar logic family and Unsaturated bipolar logic family.
i) Saturated Bipolar Logic Family: In this family the transistors used in ICs are driven into saturation.
Examples: a) Transistor-Transistor Logic (TTL)
b) Resistor-Transistor Logic (RTL)
c) Direct Coupled Transistor Logic (DCTL)
d) Diode Transistor Logic (DTL)
e)High Threshold Logic(HTL)
f) Integrated Injection Logic (IIL or I2L)

ii)Unsaturated bipolar logic family: In this family the transistors used in ICs are not

driven into saturation.
Examples: a) Schottky TTL
b) Emitter Coupled Logic(ECL)

B)Unipolar Logic Families: It mainly uses Unipolar devices like MOSFETs in addition to passive elements like resistors and capacitors. These logic families have the advantages of high speed and lower power consumption than Bipolar families. These are classified as

i) PMOS or P-Channel MOS Logic Family
ii) NMOS or N-Channel MOS Logic Family
iii) CMOS Logic Family

Bipolar Transistor Characteristics:

The basic building blocks in Bipolar logic families are diodes and transistors. If a logic circuit design involves diodes, transistors and resistors then it is called as 'Bipolar Logic'.
Bipolar junction transistor is a three terminal device with regions or terminals as Emitter, Base and Collector formed by back to back connection of PN-junction diode as N-P-N Transistor and P-N-P transistor. In bipolar junction transistor among three terminals Base region is lightly doped, Emitter region is heavily doped compared to Base and lightly doped compared to Collector and Collector is heavily doped region. Bipolar junction transistor is used as a *current controlled switch.* The Base current decides the operating region of the transistor.

Bipolar junction transistor can be operated in three regions or modes. They are
i) Cut-off Region: Both Base-Collector and Base-Emitter junctions are in reverse bias, only reverse current which is negligible will flows in the Transistor.
ii) Active Region: The base–emitter junction is forward biased and the base–collector junction is reverse biased. The collector–emitter current is approximately proportional to the base current.
iii) Saturation Region: Both Base-Collector and Base-Emitter junctions are in forward bias and voltage drops between Collector-Emitter and Base-Emitter are small(V_{CESat}, V_{BESat}). A large amount of current if flows which is controlled by R_C.

Transistor Logic Inverter:

Let an N-P-N transistor connected in a CE configuration.

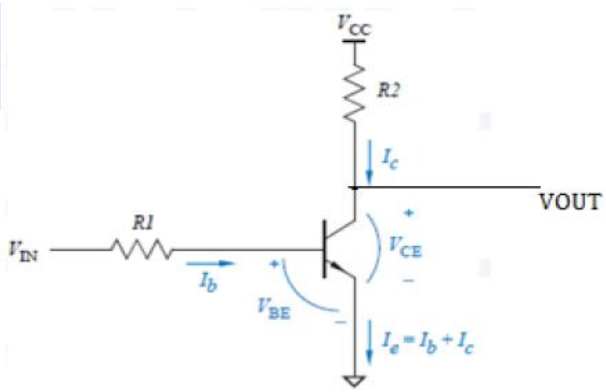

Case-1: Let Vin = 0 V, then Base-Emitter junction is not in forward bias, so no Base current (IB) will flows, Transistor is in OFF condition hence no current will flows through collector (IC). Then the output voltage VOUT= VCC= +5 V.

Case-2: Let Vin = 5 V, then Base-Emitter junction is in forward bias, so Base current (IB) will flows(select R1 and R2 values as to allow sufficient amount of IB), Transistor is in ON condition hence a large current(IC) will flows through collector. Then the output voltage VOUT= VCESat= between 0.2 to 0.3 V.

Transistor- Transistor Logic:

- The original basic transistor- transistor logic (TTL) gate was a slight improvement over the DTL gate.
- TTL widely used in the design of digital systems.
- Commercial TIL ICs have a number designation that starts with 74 and follows with a suffix that identifies the series. Examples are 7404, 74S86 and 74ALS161.
- The speed-power product is an important parameter used in comparing the various TIL series. It the product of the propagation delay and power dissipation. The speed-power product is measured in picojoules (pJ).
- A low value for this parameter is desirable because it indicates that a given propagation delay can be achieved without excessive power dissipation and vice versa.
- The standard TTL gate was the first version in theTTL family. This basic gate was then designed with different resistor values to produce gates with lower power dissipation or with higher speed.
- The propagation delay of a transistor circuit that goes into saturation depends mostly on two factors: **storage time and RC time constants**.
- Reducing the storage time decreases the propagation delay. Reducing resistor values in the circuit reduces the RC time constants and decreases the propagation delay.

- Of course, the trade-off is higher power dissipation, because lower resistances draw more current from the power supply. The speed of the gate is inversely proportional to the propagation delay.

- In the **low-power TIL gate**, the resistor values are higher than in the standard gate in order to reduce the power dissipation but the propagation delay is increased.

- In the **high-speed TTL gate**, resistor values are lowered to reduce the propagation delay. but the power dissipation is increased.

- The **Schottky TTL gate** was the next improvement in the technology. The effect of the Schottky transistor is to remove the storage time delay by preventing the transistor from going into saturation. This series increases the speed of operation of the circuit without an excessive increase in power dissipation.

- **The low-power Schottky TTL** sacrifices some speed for reduced power dissipation. It is equal to the standard TTL in propagation delay, but has only one-fifth the power dissipation.

- Further innovations led to the development of the advanced Schottky series, which provides an improvement in propagation delay over the Schottky series and also lowers the power dissipation.

- The advanced low-power Schottky has the lowest speed- power product and is the most efficient series. The fast TTL family is the best choice for high-speed designs.

- All TTL series are available in S81components and in more complex forms. such as MSI and LSI components.

- The differences in the TTL series are not in the digital logic that they perform, but rather in the internal construction of the basic NAND gale.

- In any case, TTL gates in all the available series come in three different types of output configuration:

    1. Open -collector output
    2. Totem-pole output
    3. Three-state output.

1. Open-Collector Output Gate

- The basic TIL gate is a modified circuit of the DTL gate shown in figure below.

- The multiple emitters in transistor QI are connected to the inputs, these emitters behave like the input diodes in the DTL gate, since they form a pn junction with their common base.

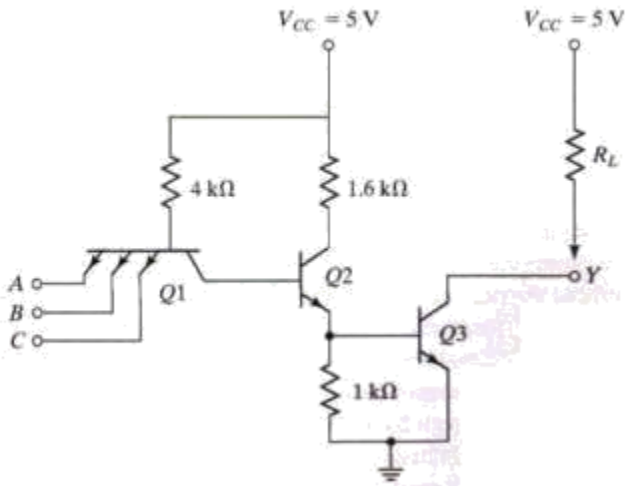

Fig .open-collector TTL NAND gate

- The base-collector junction of Q1 acts as another pn junction diode corresponding to D1 in the DTL gate

- Transistor Q2 replaces the second diode D2 in the DTL gale. The output of the TTL gate is taken from the open collector of Q3. A resistor connected to Vcc must be inserted externally to the IC package for the output to "pull up" to the high voltage level when Q3 is off; otherwise, the Output acts as an open circuit.

- The two voltage levels of the TTL gate **are 0.2 V for the low level and from 2.4 to 5 volts for the high level**

- The basic circuit is a **NAND** gate

Operation of NAND Gate

If any input is low, the corresponding base-emitter junction in Q1 is forward biased. The voltage at the base of Q1 is equal to the input voltage of 0.2 V plus a VBE drop of 0.7 or 0.9 V. In order for Q3 to start conducting, the path from Q1 to Q3 must overcome a potential of one diode drop in the base-collector pn junction of Q1 and two VBE drops in Q2 andQ3, or 3 x 0.6 = 1.8 V. Since the base of QI is maintained at 0.9 V by the input signal, the output transistor cannot conduct and is cut off. The output level will be high if an external resistor is connected between the output and Vcc(or an open circuit if a resistor is not used).

- **If all inputs are high**, both Q2 and Q3 conduct and saturate.

- The base voltage of Q1 is equal to the voltage across its base-collector pn junction plus two VBE drops in Q2 and Q1, or about 0.7 x 3 = 2.1 V.
- Since all inputs are high and greater than 2.4 V, the base-emitter junctions of Q1 are all reverse biased.
- When output transistor Q3 saturates (provided that it has a current path), the output voltage goes low to 0.2 V. This confirm s the conditions of a NAND operation

Effect of open collector without external resistor

- The open-collector TTL gate will operate without the external resistor when connected to inputs of other TTL gales although this kind of operation is not recommended because of the low noise immunity encountered.
- Without an external resistor, the output of the gate will be an open circuit when Q3 is off.
- An open circuit to an input of a TTL gate behaves as if it has a high level input (but a small amount of noise can change this to a low level).
- When Q3 conducts, its collector will have a current path supplied by the input of the loading gate through Vcc. the 4-k ohm resistor, and the forward-biased base-emitter junction.

2. TOTLEM POLE OUTPUT

- The output impedance of a gate is normally a resistive plus a capacitive load.
- The capacitive load consists of the capacitance of the output transistor, the capacitance of the fan-out gates and any stray wiring capacitance.
- When the output changes from the low to the high state, the output transistor of the gate goes from saturation to cutoff and the total load capacitance C charges exponentially from the low to the high voltage level with a time constant equal to RC
- For the open-collector gate, R is the external resistor marked RL.
- For a typical operating value of C = 15 pF and RL = 4 Kohm.
- the propagation delay of a TTL open-collector gate during the turnoff time is 35 ns.
- With an active pull-up circuit replacing the passive pull-up resistor RL, the propagation delay is reduced to 10 ns.

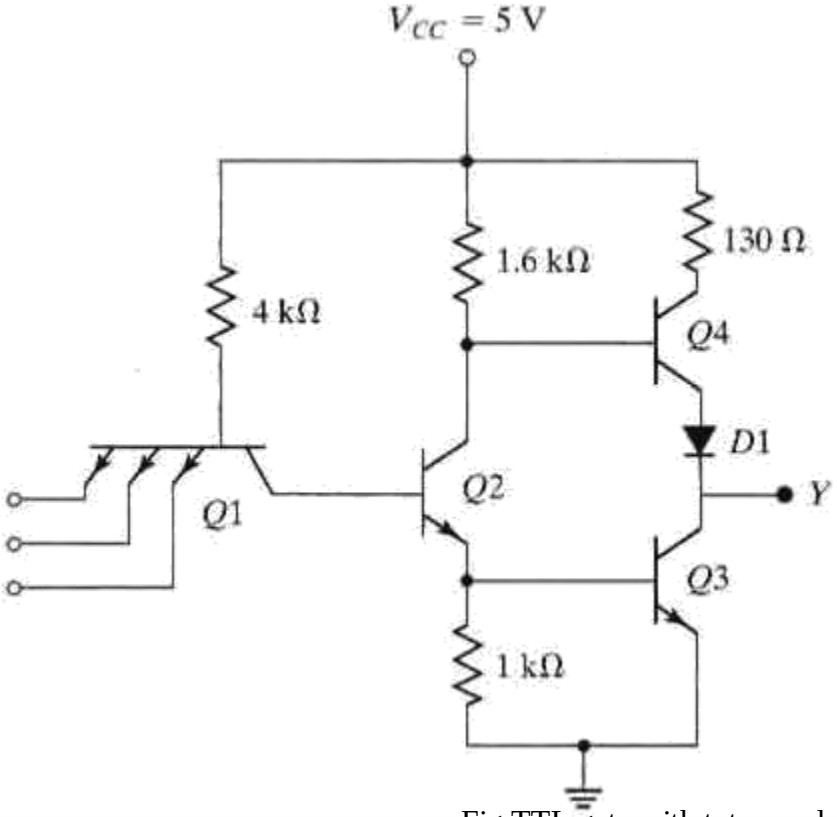

Fig TTL gate with totem pole output

Operation of Totem pole TTL

- When the output Y is in the low state, Q2 and Q3 are driven into saturation as in the open-collector gate.

- The voltage in the collector of Q2 is VBE(Q3) + VCE (Q2) or 0.7 + 0.2 = 0.9 V. The output Y = VCE(Q3) = 0.2 V. Transistor Q4 is cut off because its base must be one VBE drop plus one diode drop, or 2 x 0.6 =1.2 V to start conducting.

- Since the collector of Q2is connected to the base of Q4, the latter's voltage is only 0.9 V instead of the required 1.2 V. so Q4 is cut off.

- The reason for placing the diode in the circuit is to provide a diode drop in the output path and thus ensure that Q4 is cut off when Q3 is saturated.

- When the output changes to the high state because one of the inputs drop to the low state, transistors Q2 and Q3 go into cutoff.

- However, the output remains momentarily low because the voltages across the load capacitance cannot change instantaneously.

- As soon as Q2 turns off. Q4 conducts, because its base is connected to Vcc through the 1.6-K ohm resistor.

- The current needed to charge the load capacitance causes Q4 to saturate momentarily and the output voltage rises with a time constant RC.

- But R in this case is equal to 130 n, plus the saturation resistance of Q4, plus the resistance of the diode, for a total of approximately 150ohm.

- This value of R is much smaller than the passive pull-up resistance used in the open-collector circuit. As a consequence, the transition from the low to high level is much faster.

- As the capacitive load charges, the output voltage rises and the current in Q4 decreases, bringing the transistor into the active region.

- Thus, in contrast to the other transistors, Q4 is in the active region when Q4 is in a steady -state condition.

- The final value of the output voltage is then 5 V, minus a VBE drop in Q4,minus a diode drop in DJ to about 3.6 V.

- Transistor Q3 goes into cutoff very fast, but during the initial transition time, both Q3 and Q4 are on and a peak current is drawn from the power supply.

- This current spike generates noise in the power-supply distribution system.

- When the change of state is frequent, the transient-current spikes increase the power-supply current requirement and the average power dissipation of the circuit increases.

Summary of TTL logic families:

Transistor-Transistor Logic Families are classified as following:

(a) Early TTL families
• 74L Low power

• 74H High speed

(b) Schottky TTL families
• 74S Schottky

• 74LS Low power Schottky

• 74AS Advanced Schottky

• 74ALS Advanced Low power Schottky

• 74F Fast

Characteristics of TTL logic families:

- The important characteristics of TTL families are summarized in Table below.
- The first two rows of the table list the propagation delay (in nanoseconds) and the power consumption (in milliWatts) of a typical 2-input NAND gate in each family.
- One figure of merit of a logic family is its *speed-power product* listed in the third row of the table.
- The remaining rows have values of voltage levels for all TTL families.

	74	74S	74LS	74AS	74ALS	74F
Performance ratings						
Propagation delay (ns)	9	3	9.5	1.7	4	3
Power dissipation (mW)	10	20	2	8	1.2	6
Max. clock rate (MHz)	35	125	45	200	70	100
Fan-out (same series)	10	20	20	40	20	33
Speed-Power product(pj)	90	60	19	13.6	4.8	18
Voltage parameters						
V_{OH}(min) (V)	2.4	2.7	2.7	2.5	2.5	2.5
V_{OL}(max) (V)	0.4	0.5	0.5	0.5	0.5	0.5
V_{IH}(min) (V)	2.0	2.0	2.0	2.0	2.0	2.0
V_{IL} (max) (V)	0.8	0.8	0.8	0.8	0.8	0.8

ECL Logic families:

- TTL Family operates the Transistor in deep saturation mode, results the limitation of Switching speed by Storage delay time.

- To overcome this limitation, another circuit structure is used called Current Mode Logic. This logic family also called as Emitter Coupled Logic.

ECL Characteristics:

- It is fastest logic family because Propagation delay is short.
- For 10k, 100k families it is 1ns,for latest ECL it is 500ps.
- Preventing Transistor from deep saturation by keeping logic levels close to each other.
- Eliminates the storage delays & increases the Switching Speed.
- Noise margin is reduced, it is difficult to achieve good noise immunity.
- Power consumption is more because transistors are not in complete saturation.
- Switching Transients are less, because power supply current is more stable than TTL, CMOS.

ECL 10K series NOR/OR gate:

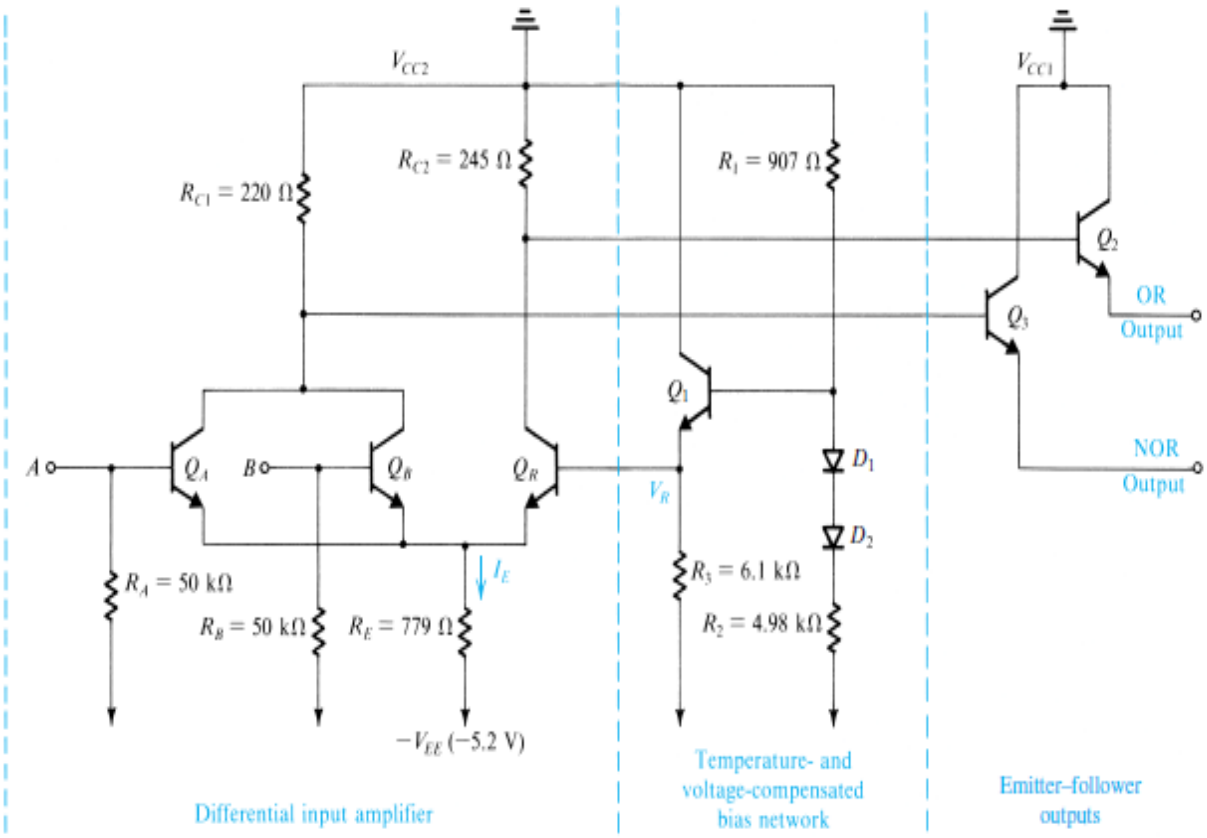

The basic gate circuit of the ECL 10K family is shown in Fig. above. The circuit consists of three parts. The network composed of *Q*1, *D*1, *D*2, *R*1, *R*2, and *R*3 generates a reference voltage *VR* whose value at room temperature is –1.32 V. As will be shown, the value of this reference voltage is made to change with temperature in a predetermined manner to keep the noise margins almost constant. Also, the reference voltage *VR* is made relatively insensitive to variations in the power-supply voltage *VEE*.

The second part, and the heart of the gate, is the differential amplifier formed by *QR* and either *QA* or *QB*. This differential amplifier is biased not by a constant-current source , but with a resistance *RE* connected to the negative supply−*VEE*. Nevertheless, we will shortly show that the current in *RE* remains approximately constant over the normal range of operation of the gate. One side of the differential amplifier consists of the reference transistor *QR*, whose base is connected to the reference voltage *VR*.

The other side consists of a number of transistors (two in the case shown), connected in parallel, with separated bases, each connected to a gate input. If the voltages applied to *A* and *B* are at the logic-0 level, which, as we will soon find out, is about 0.4 V below *VR*, both *QA* and *QB*, will be off and the current *IE* in *RE* will flow through the reference transistor *QR*. The resulting voltage drop across *RC*2 will cause the collector voltage of *QR* to be low.

On the other hand, when the voltage applied to *A* or *B* is at the logic-1 level, which is about 0.4 V above *VR*, transistor *QA* or *QB*, or both, will be on and *QR* will be off. Thus the current *IE* will flow through *QA* or *QB*, or both, and an almost equal current will flow through *RC*1. The resulting voltage drop across *RC*1 will cause the collector voltage to drop. Meanwhile, since *QR* is off, its collector voltage rises. We thus see that the voltage at the collector of *QR* will be high if *A* or *B*, or both, is high, and thus at the collector of *QR*, the OR logic function, *A*+*B*, is realized.

On the other hand, the common collector of *QA* and *QB* will be high only when *A* and *B* are simultaneously low. Thus at the common collector of *QA* and *QB*, the logic function (*A*+*B*)′ is realized. We therefore conclude that the two-input gate of Fig. above realizes the OR function and its complement, the NOR function.

The third part of the ECL gate circuit is composed of the two emitter followers, *Q*2 and *Q*3. The emitter followers do not have on-chip loads, since in many applications of high-speed logic circuits the gate output drives a transmission line terminated at the other end.

The emitter followers have two purposes: First, they shift the level of the output signals by one *VBE* drop. Thus, that the output levels become approximately –1.75 V and –0.75 V. These shifted levels are centered approximately around the reference voltage (*VR* = −1.32 V), which means that one gate can drive another. This compatibility of logic levels at input and output is an essential requirement in the design of gate circuits.

The second function of the output emitter followers is to provide the gate with low output resistances and with the large output currents required for charging load capacitances.

This ECL family has 100XXX(100101,100107,100170) part numbers. This family differs with 10k family in many aspects which are mentioned in table below.

PARAMETERS	ECL 10K	ECL 100K
Power Supply Voltage	- 5.2 v	- 4.5v
Propagation delay	2 ns	0.75 ns
Transition times	1.75 ns	0.70 ns
Power Consumption	20 mW	40 mW

CMOS Technology:

CMOS inverter: A very effective logic circuit with high input impedance, fast switching speeds, and lower operating power levels can be obtained by constructing p channel and n channel MOSFETS on a same substrate. This configuration is called complementary MOSFET arrangement. A complementary MOS (CMOS) inverter is implemented as the series connection of a *p*-device and an *n*-device, as shown in Figure 8. Note that the source and the substrate of the *p* -device is tied to the V_{DD} rail, while the source and the substrate(V_{SS} or GND) of the *n*-device are connected to the ground bus and drain terminals of both devices are connected to the output Vo.

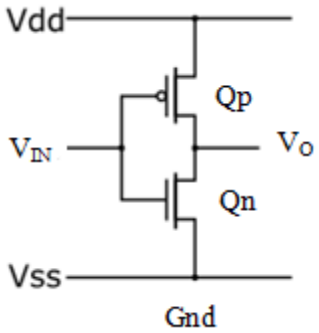

Figure 8:CMOS Inverter

An inverter is a circuit that inverts the applied signal. That is, if the logic levels of operation are 0V and 5V, an input level of 5V will result in output level of 0V and vice versa. For logic levels defined above, application of 5V at the input V_{IN}, V_{GS} of Qn=5V and Qn is on, resulting in low resistance between drain and source. Since VIN and VSS are at 5V, V_{GS} of Qp=0V, and hence Qp is off. The resulting resistance level between drain and source is quite high for Qp. Hence Vo becomes 0V establishing inversion process. For an applied voltage V_{IN} of 0V, V_{GSN}=0V and Qn will be off and V_{GSP}=-5V, turning on the p channel MOSFET.

The result is that Qp will present a small resistance , Qn a high resistance level, and Vo= 5V.

VIN	Qn	Qp	Vo
0V(LOW)	OFF	ON	5V(HIGH)
5V(HIGH)	ON	OFF	0V(LOW)

CMOS Inverter DC output characteristic and Noise margin Calculation:

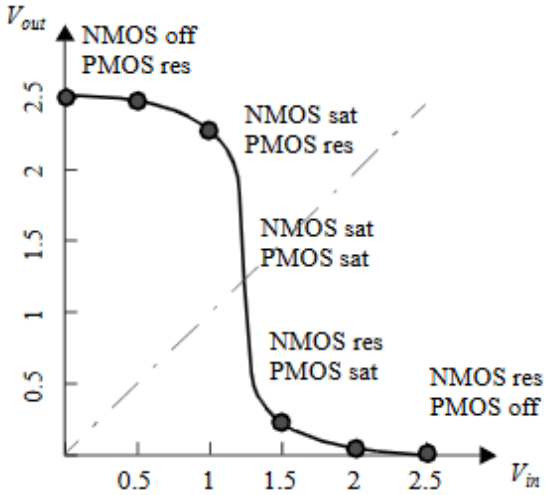

Figure VTC of static CMOS inverter, derived from Figure 5.4 (V_{DD} = 2.5 V). For each operation region, the modes of the transistors are annotated – off, res(istive), or sat(urated).

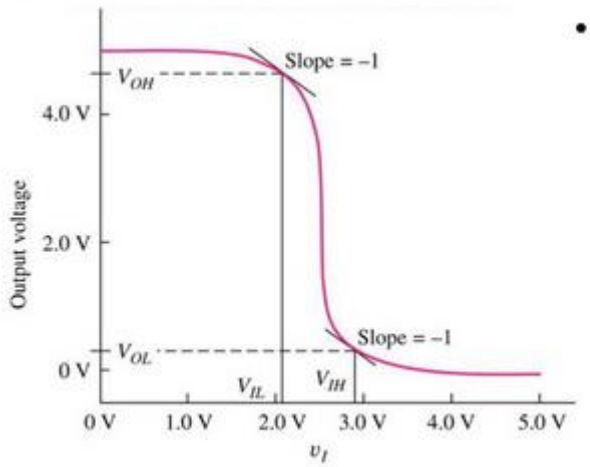

- Noise margins are defined by the regions shown in the given figure

$NM_L = V_{IL} - V_{OL}$

$NM_H = V_{OH} - V_{IH}$

THE CMOS NAND GATE:

The schematic diagram of a 2-input CMOS NAND gate is shown in Figure.9. It can be seen that in this structure, the n-type driving transistors are connected in series while the p-type load transistors are connected in parallel. Transistors are a driven in n-type cum p-type pairs with one transistor ON while the other is OFF. A table of the conducting states of the transistors for all logic combinations of the inputs is given below.

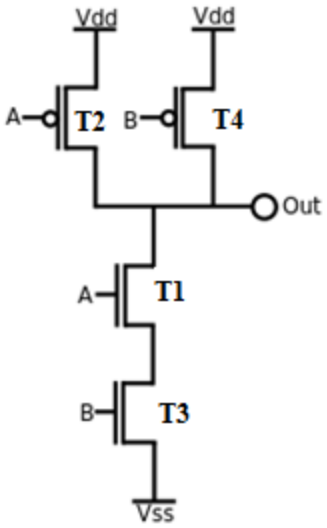

Figure 9 CMOS NAND gate

IN A	IN B	T_1	T_2	T_3	T_4	OUT
LO	LO	OFF	ON	OFF	ON	HI
LO	HI	OFF	ON	ON	OFF	HI
HI	LO	ON	OFF	OFF	ON	HI
HI	HI	ON	OFF	ON	OFF	LO

THE CMOS NOR GATE:

The schematic diagram of a 2-input CMOS NOR gate is shown in Figure.10. It can be seen that similar to NAND gate structure, the n-type driving transistors are connected in parallel while the p-type load transistors are connected in Series. Transistors are a driven in n-type cum p-type pairs with one transistor ON while the other is OFF. A table of the conducting states of the transistors for all logic combinations of the inputs is given below.

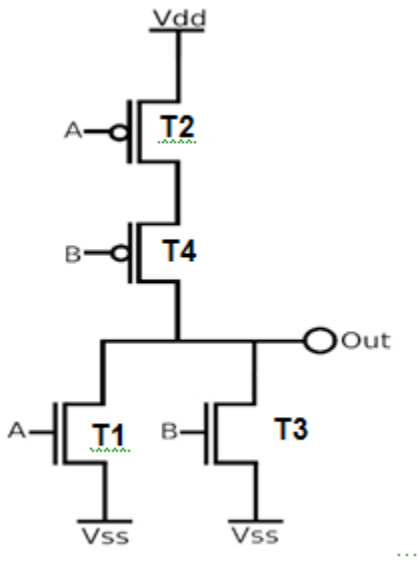

Figure 10 CMOS NOR gate

A	B	T1	T2	T3	T4	OUT
LO	LO	OFF	ON	OFF	ON	HI
LO	HI	OFF	ON	ON	OFF	LO
HI	LO	ON	OFF	OFF	ON	LO
HI	HI	ON	OFF	ON	OFF	LO

Comparisons among CMOS, TTL and ECL logic circuits:

S.No	PARAMETER	CMOS	TTL	ECL
1	Device Used	nMOS, pMOS	BJT	BJT
2	$V_{IH(min)}$	3.5 V	2 V	-1.2 V
	$V_{IL(max)}$	1.5 V	0.8 V	-1.4 V
	$V_{OH(min)}$	4.95 V	2.4 V	-0.9 V
	$V_{OL(max)}$	0.005 V	0.4 V	-1.7 V
3	HIGH level Noise margin	1.45 V	0.4 V	0.3 V
4	LOW level Noise margin	1.45 V	0.4 V	0.3 V
5	Noise immunity	> TTL	< CMOS	More vulnerable to Noise
6	Propagation Delay	70 ns	10 ns	500 ps
7	Switching Speed	< TTL	>> CMOS	Fastest
8	Power Dissipation/Gate	0.1 mW	10 mW	25 mW
9	Speed-Power Product	0.7 pJ	100 pJ	0.5 pJ
10	Fan-out	50	10	25
11	Power Supply Voltage	3-15 V	Fixed 5V	-4.5 V to -5.2 V
12	Power Dissipation	Increase with f	Increase with f	Constant with f
13	Application	Portable Instruments (Battery Supply)	Laboratory Instruments	High Speed Instruments